

excelli*SCAN* 30 ARRAY

More Productivity for Additive Manufacturing

SCANLAB
innovators for industry

Advantages

The excelli*SCAN* system especially for additive manufacturing

The excelli*SCAN* 30 ARRAY is specially adapted for additive manufacturing and impresses above all with its compact design. It also includes other features that turn it into the ideal tool for demanding AM applications:

- High image field overlap in multi-head systems
- *SCAN*ahead control technology
- Temperature sensors for system monitoring
- Outstanding dynamic performance

Ready for *SCAN*motionControl

- Shortest process times thanks to optimum use of scanner dynamics and laser power
- Maximum accuracy and precise laser control
- Simple trajectory planning and simulation: "What you see is what you get"

More information about *SCAN*motionControl in the video:

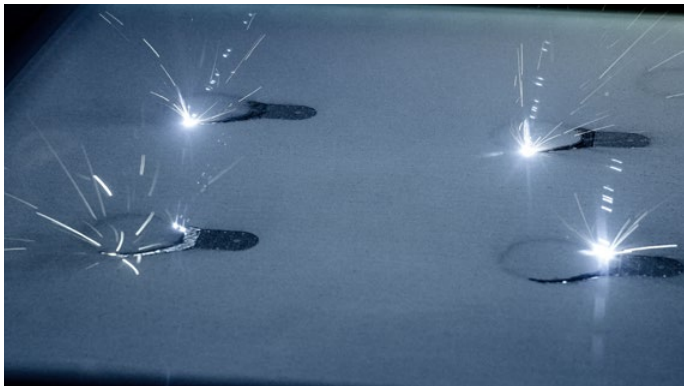

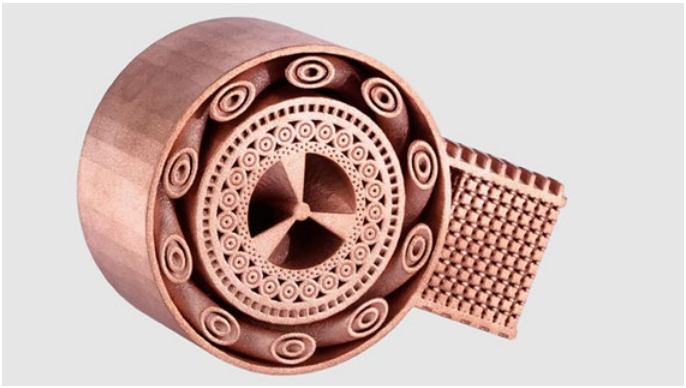



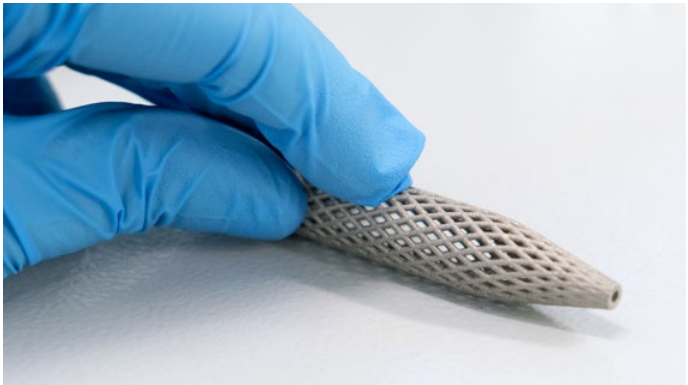

High image field overlap

The slim design and a optimized galvo-position allow the systems to be installed close together in a multi-head system.

Your advantages: high productivity, simple integration, more freedom in process design

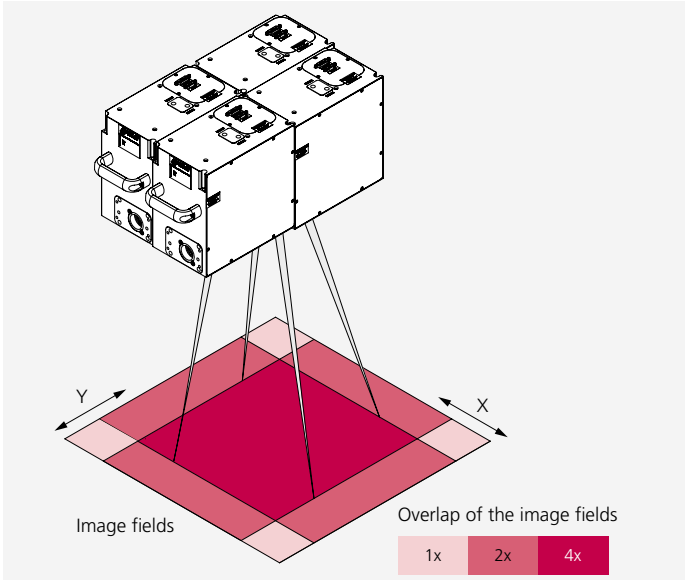

*SCAN*ahead control technology

The maximum acceleration and deceleration significantly reduces reversing distances.

Your advantages: shorter process times

Example: Additive Manufacturing

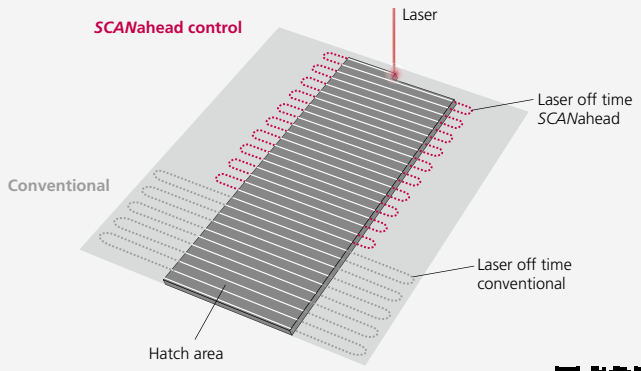

More information about *SCAN*ahead in the video:

Precision & Stability

Repeatability (RMS) [µrad]	< 0.4
Dither (RMS) [µrad]	< 1.6
Nonlinearity [mrad] (1)	< 0.5
Temperature drift	
Offset [µrad/K]	< 10
Gain [ppm/K]	< 5
Long-term drift	
Over 24 hours (after 3 h warm-up) (2)	
Offset [µrad]	< 20
Gain [ppm]	< 25

(1) related to 0.77 rad (2) at constant ambient temperature and load
(all angles are in optical degrees, all specifications are preliminary)

Dynamics

Tracking error [ms]	0
Acceleration [rad/s²]	130,000
Maximum speed [rad/s]	70

Common Specifications

Optical performance	
Typical scan angle [rad]	±0.37
Gain error [mrad]	< 5
Zero offset [mrad]	< 5
Wave length [nm]	1060 – 1085
Max. laser power [kW]	2
Power supply (RMS)	48 V, 5 A
Digital interface	SL2-100
Weight [kg]	approx. 9

Technical Drawings

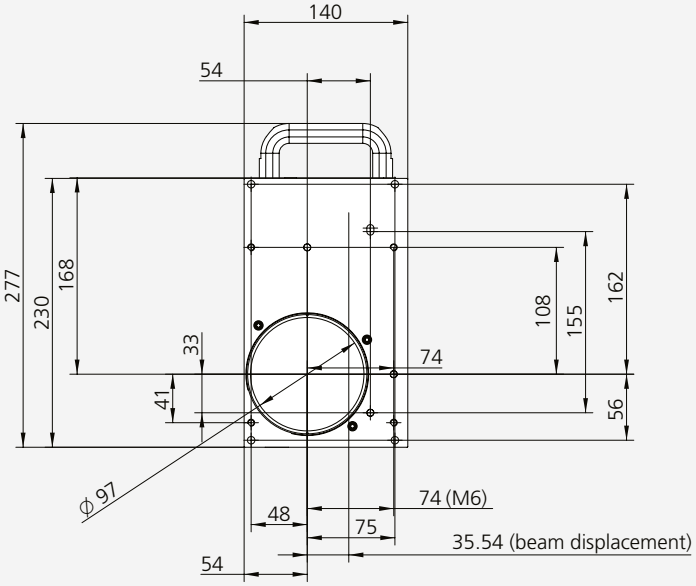

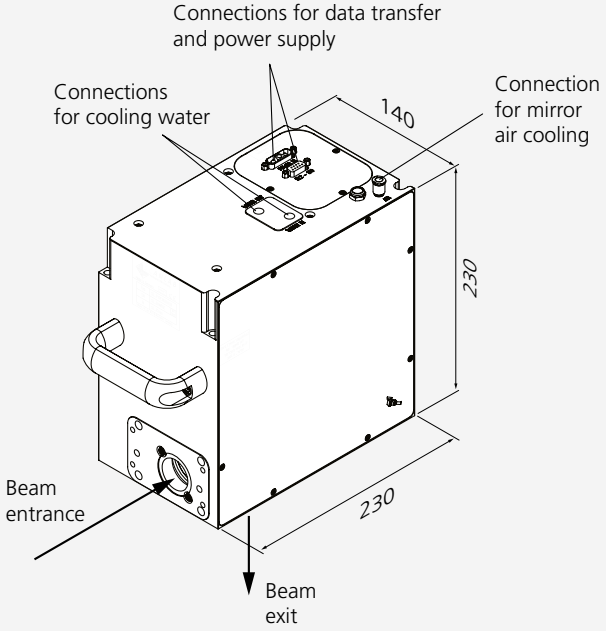

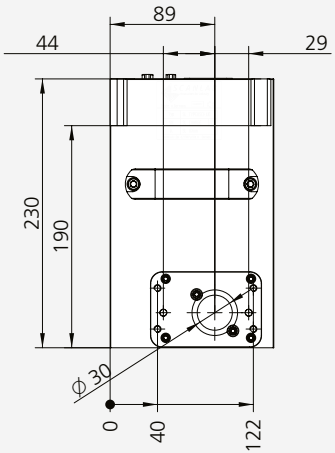

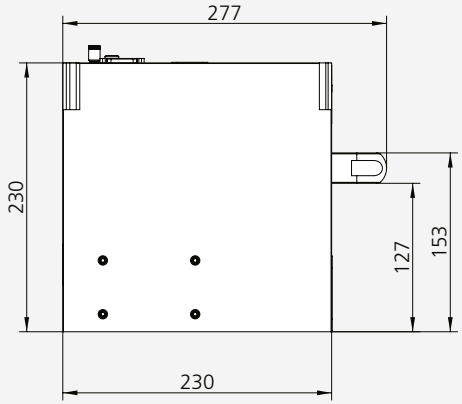

all dimensions in mm

11/2026 Information is subject to change without notice.
Product photos are non-binding and may show customized features.
Photos manufacturing process and cooper component: EOS GmbH

SCANLAB GmbH · Siemensstr. 2a · 82178 Puchheim · Germany
Tel. +49 89 800 746-0 · info@scanlab.de · www.scanlab.de

SCANLAB America, Inc. · 596 Herrons Ferry Rd, Suite 208, Rock Hill, SC 29730 · USA
Tel. +1 833 722-6872 · info@scanlab-america.com · www.scanlab-america.com